POWER PLANT MOUNT

CONTENTS

ENGINE MOUNTING 2
TRANSMISSION MOUNTING 3

ENGINE MOUNTING

REMOVAL AND INSTALLATION

Caution
Provisionally tighten the parts marked by an asterisk (*), and then fully tighten after loading the full weight of the engine on the vehicle body.

Pre-removal and Post-installation Operation
Crossmember Removal and Installation (Refer to GROUP 33.)

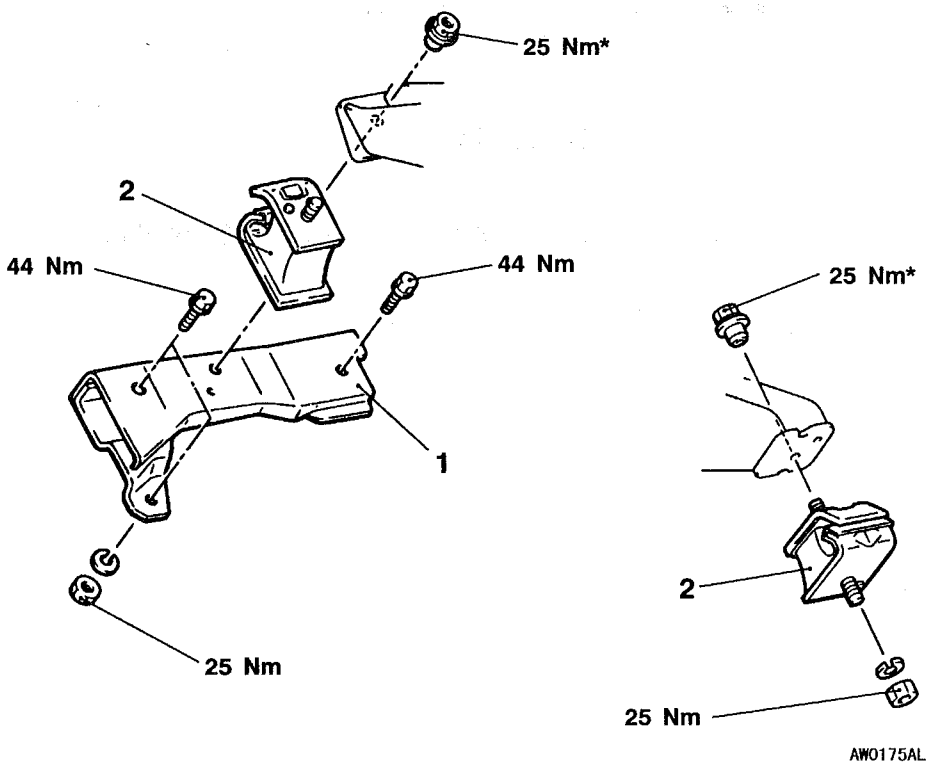

Removal steps
1. Engine mount bracket
2. Engine mount insulator

TRANSMISSION MOUNTING

REMOVAL AND INSTALLATION

Caution
Provisionally tighten the parts marked by an asterisk (*), and then fully tighten after loading the full weight of the transmission on the vehicle body.

Pre-removal and Post-installation Operation
Jack up the Engine and Transmission Assembly until there is no weight on the Engine Mount Bracket Insulator.

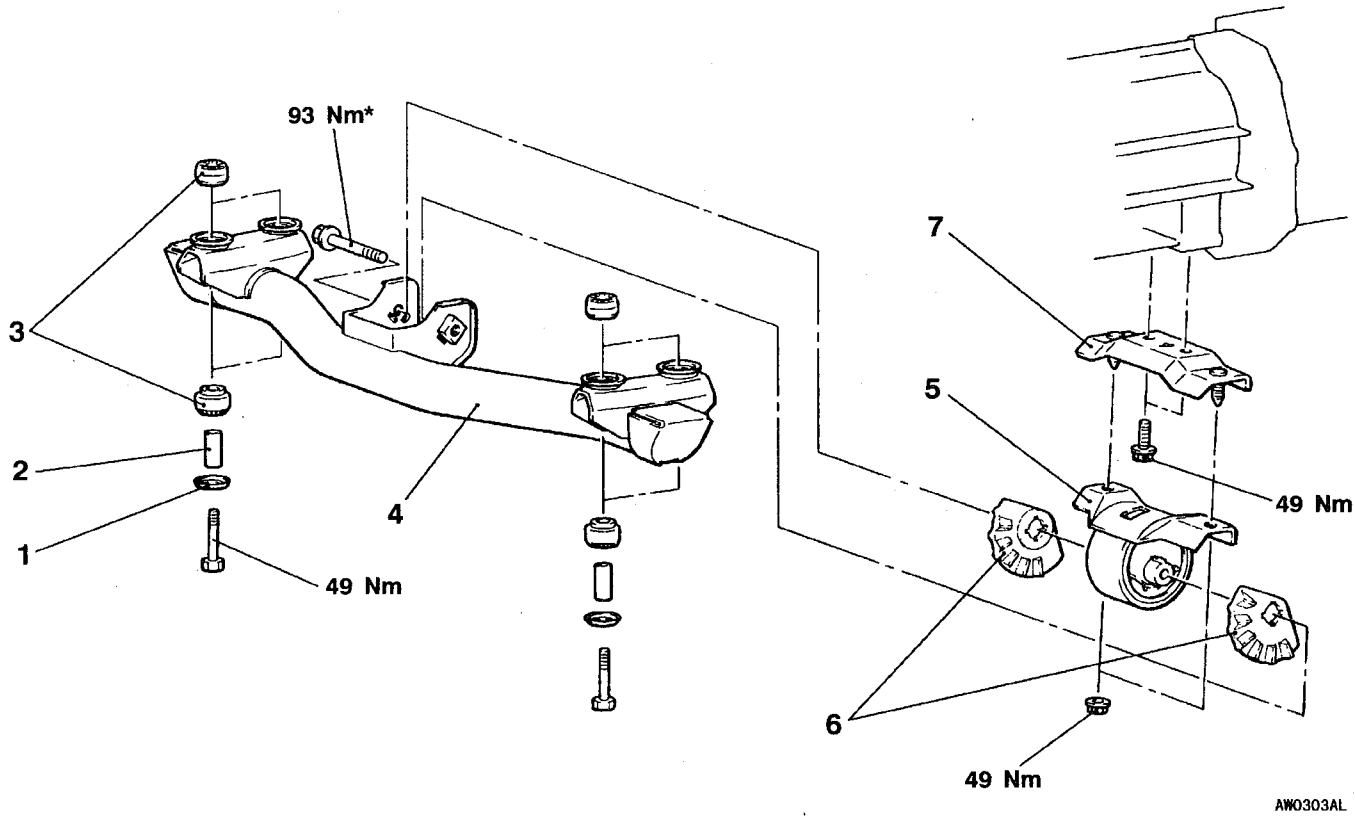

Removal steps

1. Washer
2. Spacer
3. Transmission mount bushing
4. Transmission mount crossmember assembly
5. Transmission mount insulator assembly

▶A◀ 6. Transmission mount stopper

7. Adaptor

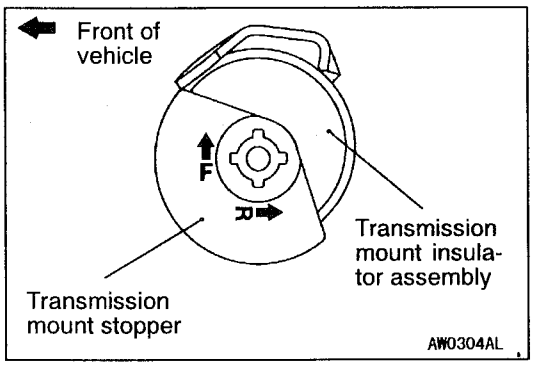

INSTALLATION SERVICE POINT

▶A◀ TRANSMISSION MOUNT STOPPER INSTALLATION

Install the transmission mount stopper so that the arrow faces the direction shown.

NOTE
Disregard F and R stamped as a shared part.

NOTES